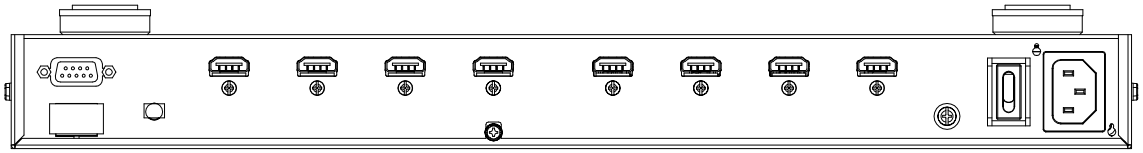

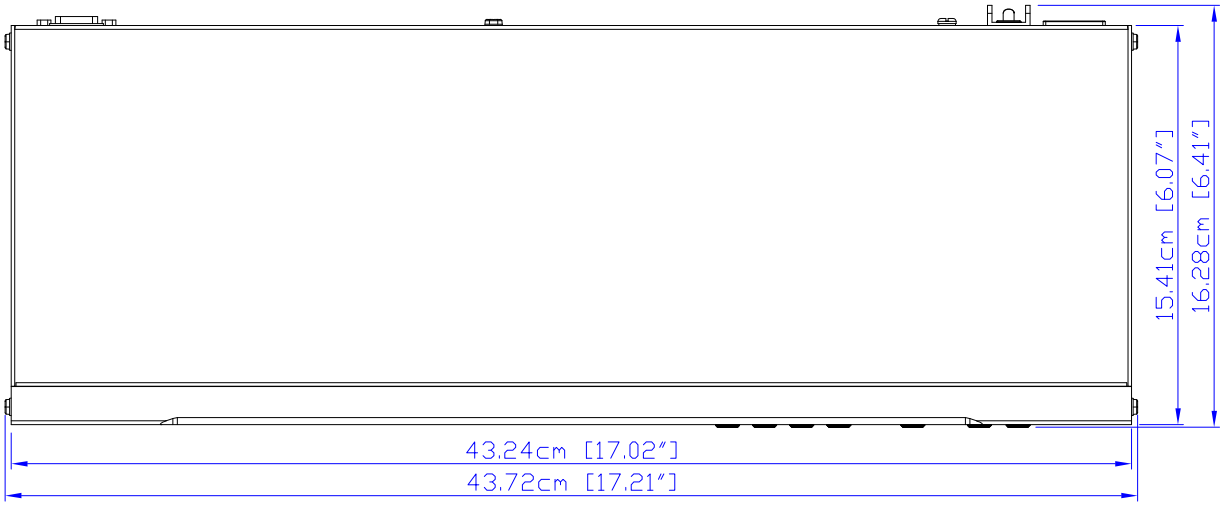

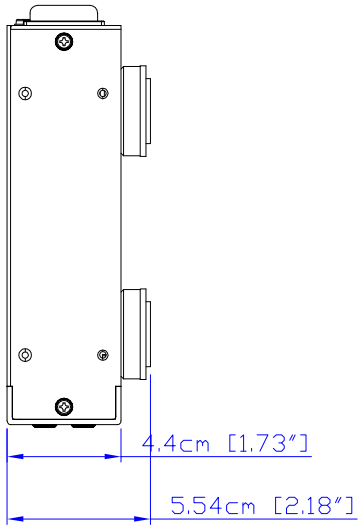

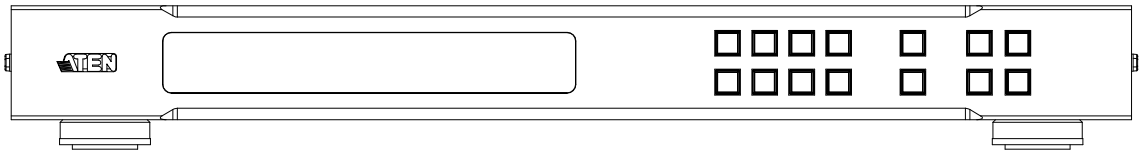

ATEN

VM0404HB